Pair of roller shoes + pair of single rails

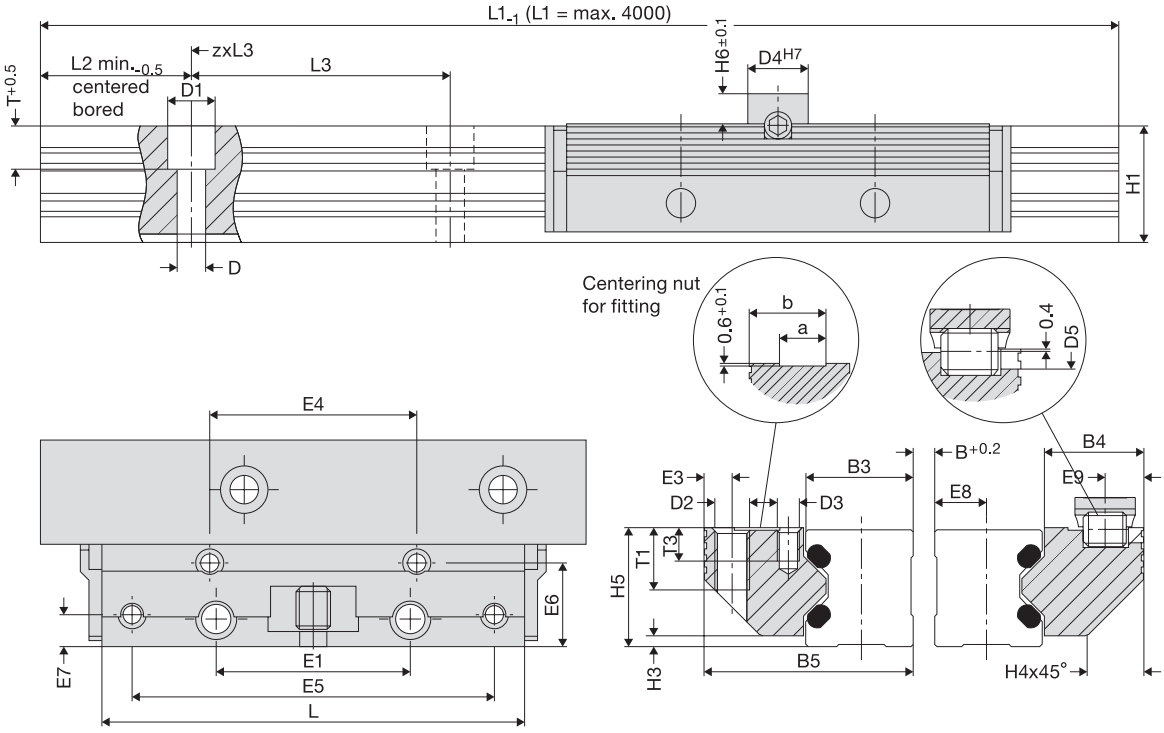

Dimensions

Size	Dimensions mm																	
	B5	H5	B3	B4	D3	D4	D5	E3	E4	E5	E6	E7	E8	E9	H6	T3	a	b
25	48.4	27.5	25.00	22.9	M 5	14	6	6.4	48	84	19.4	7.4	12.0	8.9	7	5.0	10.5	17.5
35	68.9	37.5	35.00	32.9	M 6	14	6	8.9	67	117	28.4	8.9	17.0	8.9	7	7.5	12.5	26.0
45	82.4	46.5	45.00	36.4	M 8	14	6	9.9	83	146	30.9	9.9	22.0	8.9	7	9.5	15.5	31.0

Load ratings, weight

Size	Load rating N		Moment load rating* RSP Nm				Weight kg	
	C	C_0	M_{0cx}	M_{cx}	M_{0cy}/M_{0cz}	M_{cy}/M_{cz}	RSP	Rail/m
25	7500	3700	1.8 (B+58.4)	3.7 (B+58.4)	81	165	0.34	1.9
35	13400	8100	4.0 (B+85.0)	6.7 (B+85.0)	250	416	0.99	3.5
45	24300	14400	7.2 (B+109.0)	12.2 (B+109.0)	548	924	1.79	5.6

*See technical information for more information on moment load ratings

Order numbers

Order no. RSP	Order code Pair of single rails
84367S	e.g. FDH 25 E 1500
84368S	
84369S	

Type
Size
Single rail
Length in mm**

**Guide rails in one piece up to 4000 mm.
Longer stroke lengths are coupled.